January 15, 2026
Lit. No. 86835, Rev. 05

SnowEx®

AccuSpray™ De-Icing Systems

VSS-2000 and VSS-3000

Parts List

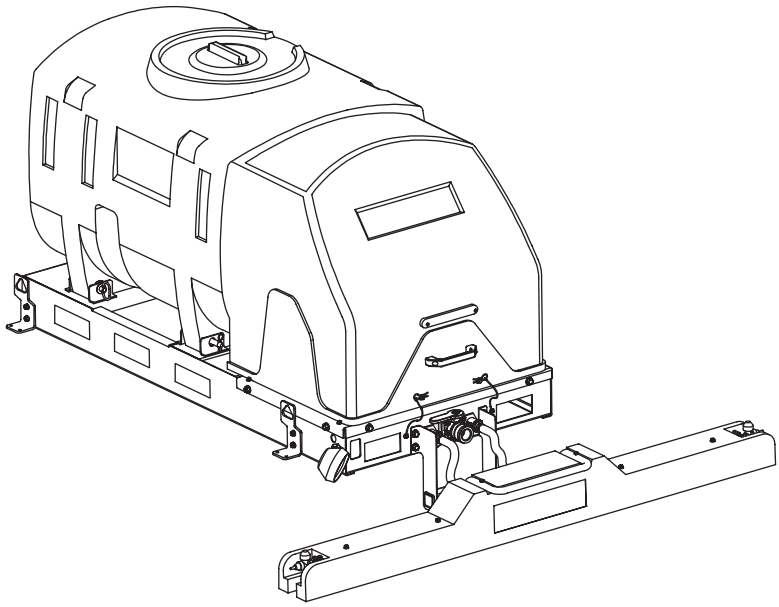

A DIVISION OF DOUGLAS DYNAMICS, LLC

TANK SUB-ASSEMBLY

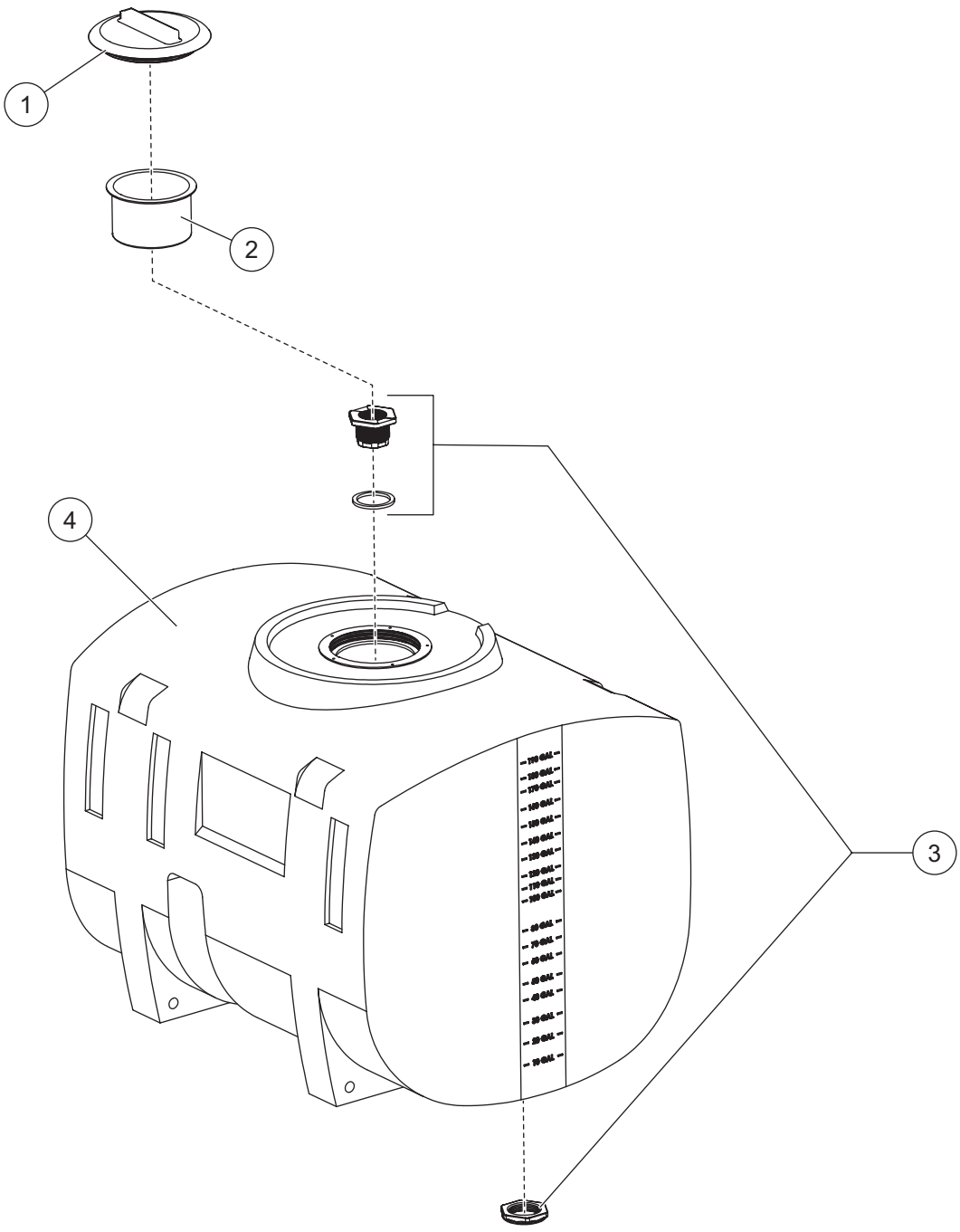

Tank Sub-Assembly							
Item	Part	Qty	Description	Item	Part	Qty	Description
1	T20323	1	Tank Lid	4	D5200	1	Tank, 200 gal (shown)
2	T20324	1	Basket Strainer		D5229	1	Tank, 300 gal (not shown)
3	D6917	1	Bulkhead Assembly				

FRAME SUB-ASSEMBLY

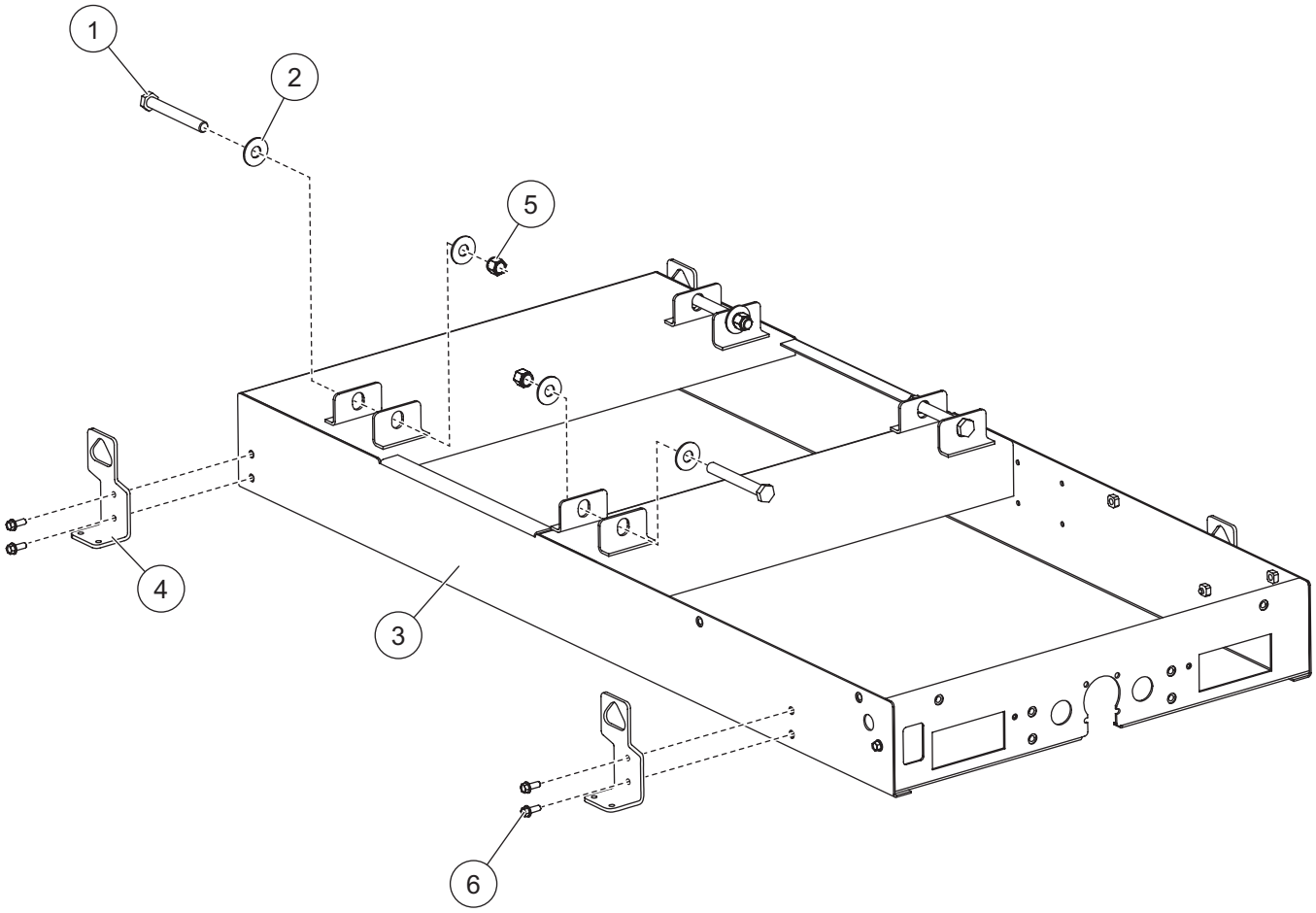

Frame Sub-Assembly							
Item	**Part**	**Qty**	**Description**	**Item**	**Part**	**Qty**	**Description**
1	D5291	4	3/4-10 x 6 Hex Cap Screw	6	D4122	8	3/8-16 x 1-1/2 Hex Cap Screw
2	D5335	4	Tank Spacer	ns	D6546	2	Label – Warning, GVWR
3	D5280	1	Frame, 200 gal	ns	T20317	2	Label – Warning, Wear Goggles
	D5230	1	Frame, 300 gal	ns	D6548	1	Label – Warning, Read Owner's Manual
4	D5244	4	Lift/Mounting Bracket				
5	D4129	4	3/4-10 Locknut	ns	11100	1	Label – Warning, Rear Camera
ns = not shown							

SPRAY BOOM SUB-ASSEMBLY

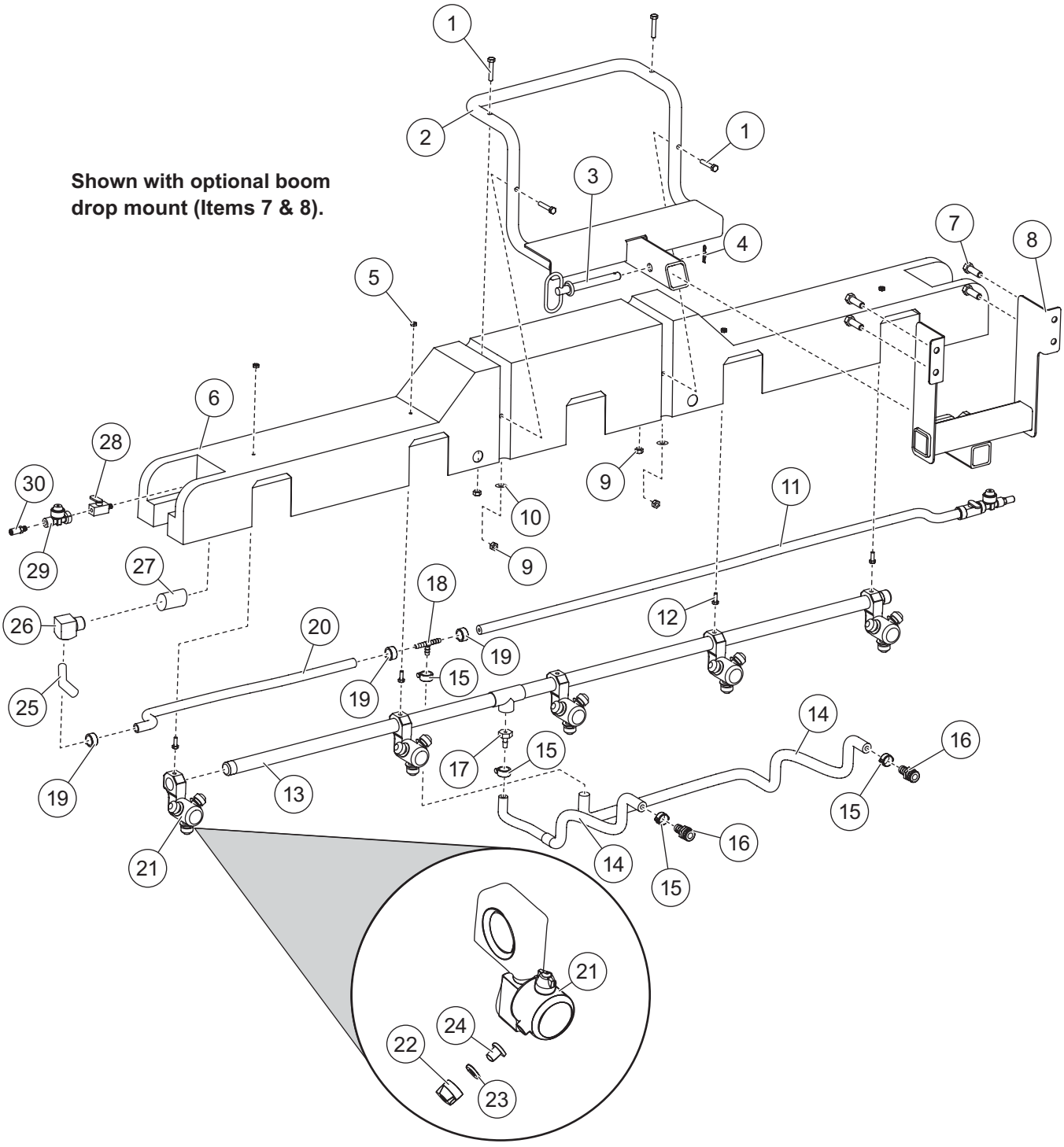

PBA-020 Spray Boom Sub-Assembly							
Item	**Part**	**Qty**	**Description**	**Item**	**Part**	**Qty**	**Description**
1	D6462	4	5/16-18 x 1-3/4 Hex Cap Screw	18	D5250	1	3/4 x 1/2 x 1/2 Barb, Tee
2	D5223	1	Boom Bracket	19	D5260	4	1/2 Hose Crimp Clamp
3	D4136	1	5/8 x 5-1/2 Hitch Pin	20	D5235	1	Hose, 1/2 x 30 PVC
4	D4135	1	Hairpin Clip	21	D6939	5	Rotary Nozzle Assembly
5	D5706	2	5/16 Serrated Flange Nut	22	D6957	5	Green Nozzle Cap
6	D5210	1	Spray Boom		D6955	5	Yellow Nozzle Cap
7	D6528	4	1/2-13 x 1 Serrated Flange Hex Cap Screw		D6956	5	Red Nozzle Cap
				23	D6961	5	Nozzle Gasket
8	D5290	1	Wet Boom Drop Mount	24	D5234	5	Triple Streamer Tip
9	D6138	4	5/16-18 Locknut		D5233	5	Streamer Tip
10	D6165	4	5/16 Flat Washer		D5232	5	Fan Tip
11	D5236	1	Hose, 1/2 x 48 PVC	25	D5202	2	1/4 x 1/2 Brass Hose Barb, 45°
12	D5209	4	5/16-18 x 3/4 Hex Cap Screw	26	D5281	2	1/4 Street Elbow, 90°
13	D5227	1	Spray Boom, 1" Pipe	27	D5201	2	1/4 Female Brass Bulkhead
14	10825	2	Hose, 3/4 x 30 PVC	28	D5231	2	Boomless Nozzle Valve
15	D5240	4	3/4 Hose Crimp Clamp	29	D5241	2	Boomless Nozzle Check Valve
16	D5228	2	3/4 Hose Quick Disconnect Fitting	30	D5215	2	Boomless Nozzle
17	D6928	1	3/4 Hose Barb, Straight				
SS = Stainless Steel							

PUMP / PLUMBING SUB-ASSEMBLY

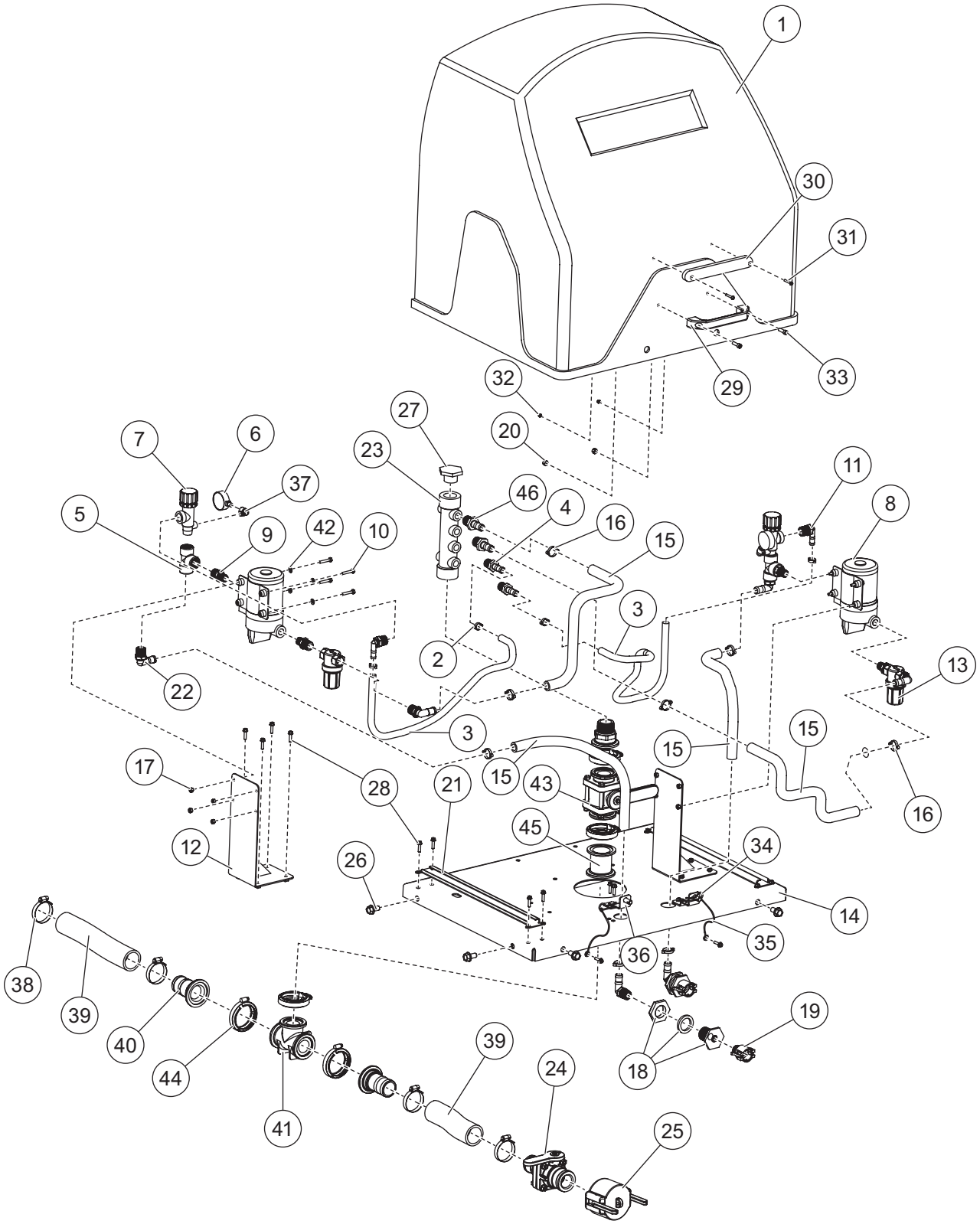

Pump / Plumbing Sub-Assembly							
Item	**Part**	**Qty**	**Description**	**Item**	**Part**	**Qty**	**Description**
1	D5214	1	Pump Assembly Cover, VSS-2000	22	D6905	6	3/4 x 3/4 Hose Barb, 90°
	D5256	1	Pump Assembly Cover, VSS-3000	23	D5188	1	Hose Manifold
2	D5260	8	1/2 Hose Crimp Clamp	24	D5197	1	2" Ball Valve Tank Shut-Off
3	D6989	1	Hose, 1/2 x 23 PVC	25	D5222	1	Fill Port Cap
	D6989	1	Hose, 1/2 x 27 PVC	26	D6528	6	1/2-13 x 1 Serrated Flange Cap Screw
4	D5255	2	3/4 x 1/2 Hose Barb, Straight	27	D5185	1	1-1/2 Poly Plug
5	D6926	2	3/4 NPT Tee	28	D6132	18	1/4-20 x 1 Serrated Flange Cap Screw
6	D5213	2	Gauge, 0–100 psi	29	D5248	1	Cover Handle
7	D5212	2	Regulator Valve	30	D6514	1	Rear CHMSL Brake Light
8	D5205	2	Pump, 7.0 Gal/min	31	D6529	2	#10-32 x 1-1/4 Phillips Head Screw SS
9	D5225	4	3/4 x 1/2 Reducing Nipple	32	D6158	2	#10-32 Locknut
10	T30726	8	1/4-20 x 1-1/2 Hex Cap Screw SS	33	D5293	2	5/16-18 x 1 Socket Head Screw SS
11	D5254	6	3/4 x 1/2 Hose Barb, 90°	34	D4135	2	5/16 Hairpin Clip
12	D5198	2	Pump Mount Stand	35	D5296	4	Hairpin Cable Lanyard
13	D6918	2	3/4 Strainer	36	D5258	2	Cover Mounting Pin Bracket
14	D5199	1	Pump Mounting Base, VSS-2000	37	D5249	2	1/4 Gauge Elbow, 90°
	D5238	1	Pump Mounting Base, VSS-3000	38	D5189	4	2" Hose Clamp
15	D6990	1	Hose, 3/4 x 19 PVC	39	D5196	1	2" x 8" EPDM Hose, Red
	D6990	1	Hose, 3/4 x 21 PVC		D5196	1	2" x 14" EPDM Hose, Red
	D6990	1	Hose, 3/4 x 24 PVC	40	D5192	2	2" Flange x 2" Hose Barb
16	D5240	10	3/4 Hose Crimp Clamp	41	D5195	1	2" Flanged Tee
17	T15016	6	1/4-20 Locknut SS	42	T15104	11	1/4 Flat Washer SS
18	D6917	2	3/4 Bulkhead	43	D5193	1	Tank Fill Valve, 2" Ball Valve
19	D6916	2	Female Quick Disconnect	44	D5187	5	Manifold Worm Screw Clamp
20	T15018	8	5/16-18 Locknut SS	45	D5194	1	2" Flanged Coupling
21	D5257	2	Pump Cover Track Slide	46	D6928	2	3/4 Barb, Straight
SS = Stainless Steel							

HOSE REEL ASSEMBLY (OPTIONAL KIT)

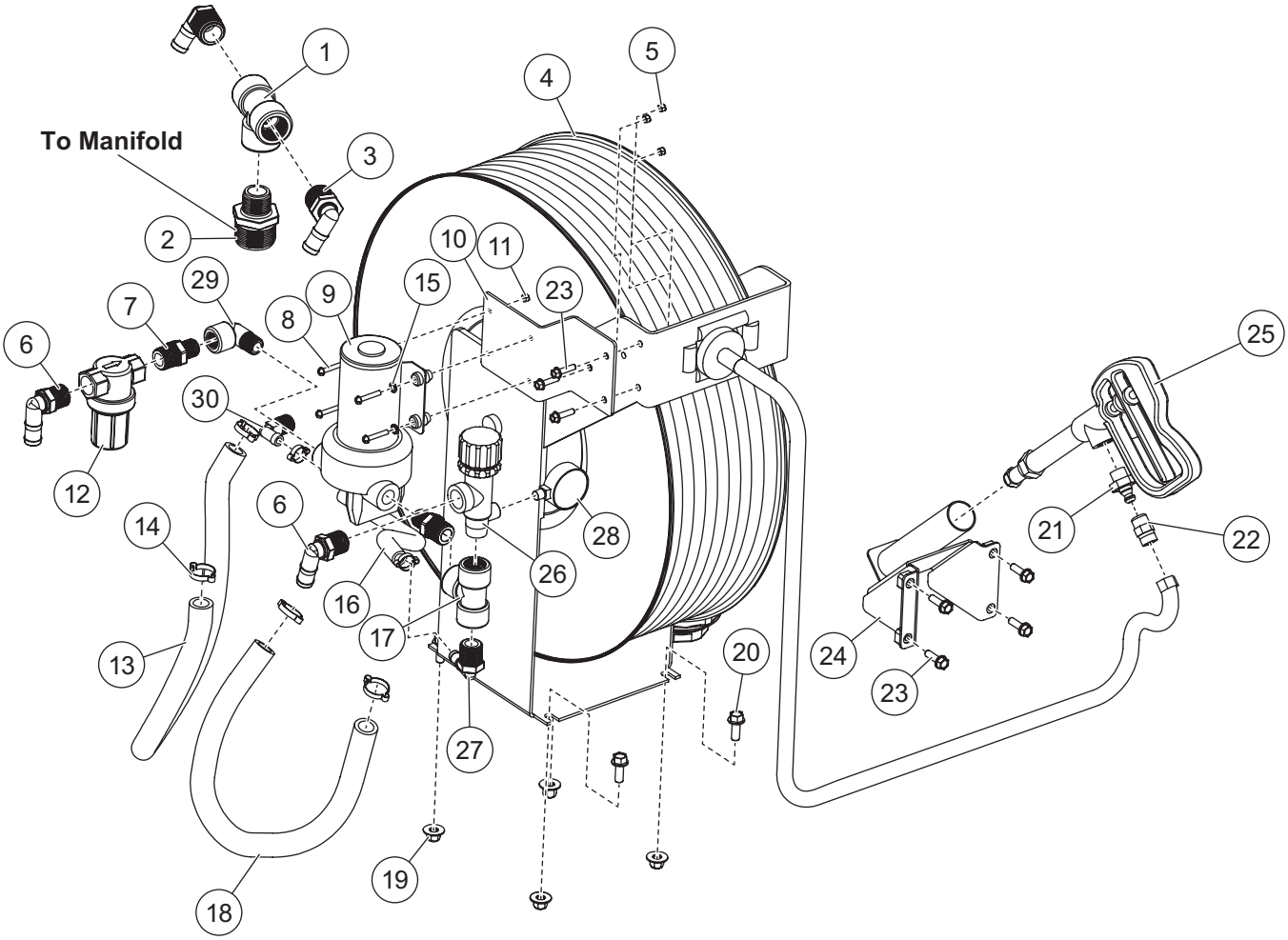

HRK-020 Hose Reel Assembly							
Item	**Part**	**Qty**	**Description**	**Item**	**Part**	**Qty**	**Description**
1	D5317	1	1" Tee, Poly	17	D6926	1	3/4 Tee
2	D5316	1	1-1/2 x 1 Reducing Nipple, Poly	18	D6990	1	Hose, 3/4 x 23 PVC
3	D5318	2	1 x 3/4 Poly Hose Barb, 90°	19	D6584	4	3/8-16 Serrated Flange Nut
4	D5206	1	100' Hose Reel Spring Return	20	D6452	4	3/8-16 x 1 Serrated Flange Hex Cap Screw
5	T15018	1	5/16-18 Locknut SS				
6	D6905	2	3/4 x 3/4 Hose Barb, 90°	21	D5208	1	1/2 NPT Coupler Plug
7	D5225	2	3/4 x 1/2 Reducing Nipple	22	D5204	1	1/2 NPT Coupler Socket
8	D5294	4	#10-32 x 1-1/4 Hex Cap Screw SS	23	D5209	7	5/16-18 x 3/4 Hex Cap Screw SS
9	D5242	1	Pump, 5.0 Gal/min	24	D5243	1	Spray Gun Mount Bracket
10	D5287	1	Pump Bracket	25	D5224	1	Spray Gun
11	D5948	4	#10-32 Locknut SS	26	D5212	1	Regulator Valve
12	D6918	1	Strainer	27	D5254	1	3/4 x 1/2 Hose Barb, 90°
13	D6990	1	3/4 x 28 PVC Hose	28	D5213	1	Gauge
14	D5240	4	1-1/16 Hose Crimp Ring	29	D6923	1	1/2 Street Elbow, 90°
15	D5292	4	#10 Flat Washer SS	30	D5203	1	1/2 x 1/2 Brass Hose Barb, 90°
16	D6989	1	Hose, 1/2 x 12 PVC				
SS = Stainless Steel							

ELECTRICAL COMPONENTS

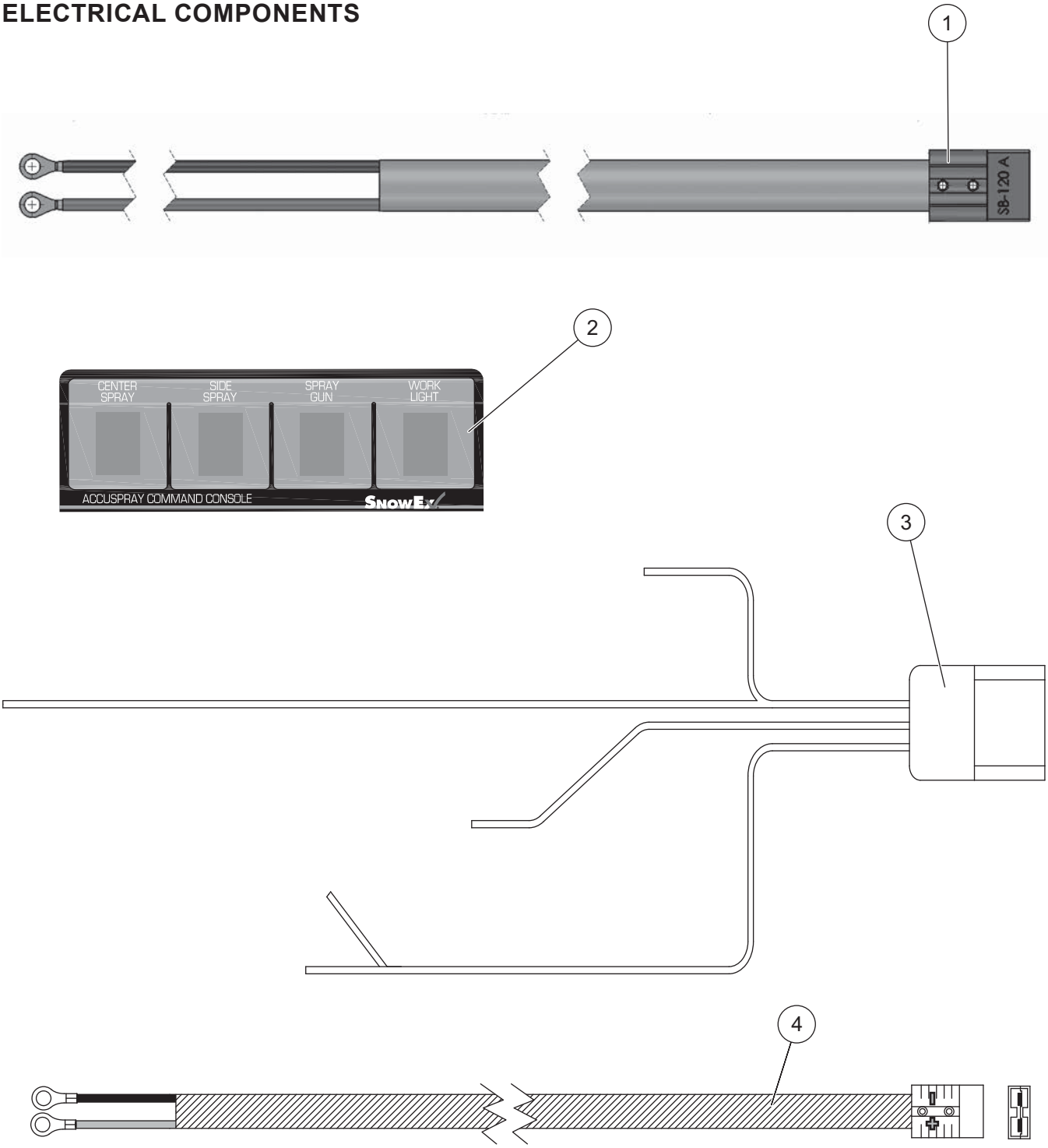

Electrical Components							
Item	**Part**	**Qty**	**Description**	**Item**	**Part**	**Qty**	**Description**
1	D5218	1	Vehicle Harness	4	D6341	1	Control Power Cable
2	D5216	1	Control	ns	D6344	1	Dielectric Grease
3	D5219	1	Sprayer Harness				
ns = not shown							

TrynEx International, LLC
531 Ajax Drive
Madison Heights, MI 48071-2429
www.snowexproducts.com

A DIVISION OF DOUGLAS DYNAMICS, LLC

Copyright © 2026 Douglas Dynamics, LLC. All rights reserved. This material may not be used, reproduced, or copied in any manner, in whole or in part, in any printed, mechanical, electronic, film, or other distribution and storage media, nor analyzed or manipulated in any manner for the purpose of training artificial intelligence technologies or systems, without the written consent of TrynEx International, LLC. In accordance with Article 4(3) of the Digital Single Market Directive 2019/790, TrynEx International expressly reserves this work from the text and data mining exception. Authorization to photocopy items for internal or personal use by TrynEx International outlets or equipment owner is granted.

TrynEx International reserves the right under its product improvement policy to change construction or design details and furnish equipment when so altered without reference to illustrations or specifications used. TrynEx International or the vehicle manufacturer may require or recommend optional equipment for sprayers/deicing systems. Do not exceed vehicle ratings with a sprayers/deicing system. TrynEx International offers a limited warranty for all equipment and accessories. See separately printed page for this important information. The following are registered (®) or unregistered (™) trademarks of Douglas Dynamics, LLC: AccuSpray™, SnowEx®.

Printed in U.S.A.